HWIR333

Cabinet Bean Pull

1-1/2" x 5-1/4"

5-1/4" forged iron bean cabinet pull.

Shown with dark wax iron finish.

SPECIFICATIONS

Finishes:
- DWIR, BLIR, RUIR, NAIR, BLAQ

Standard Components:
- Cabinet Bean Pull
- (2) Screws

Additional Product Information:
- Drawings, Installation Instructions, and Hardware Spec Order Form available upon request.

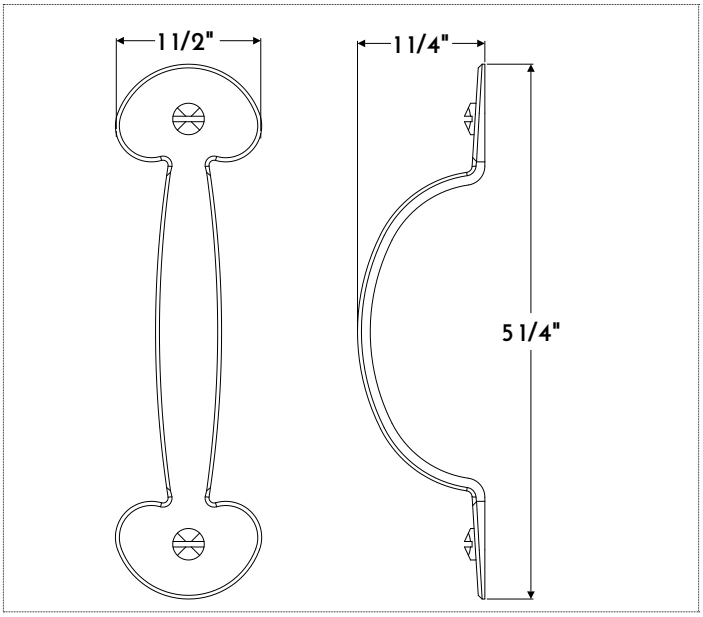

Items are handmade. Slight variations in size may occur.

FINISHES

BRASS		IRON		NICKEL	
DABS	Dark Antiqued*	BLIR	Satin Black Exterior	PONI	Polished
LABS	Light Antiqued*	DWIR	Dark Wax*	BRNI	Brushed
PUBS	Polished Unlacquered	NAIR	Natural	AQNI	Antiqued Polished
PLBS	Polished Lacquered	RUIR	Rustic		
BRBS	Brushed*	BLAQ	Black Lacquer		
BZBS	Bronzed*				

**Clear coat finish available*

Heritage Metalworks, LLC | 2089 Bondsville Rd. Downingtown, PA 19335 | (610) 518-3999 | hmwpa.com