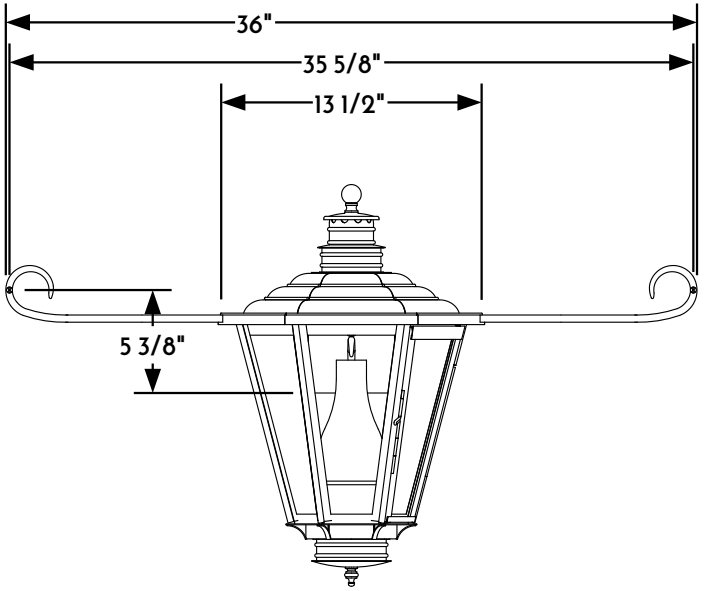

1 WALL LANTERN FRONT ELEVATION VIEW

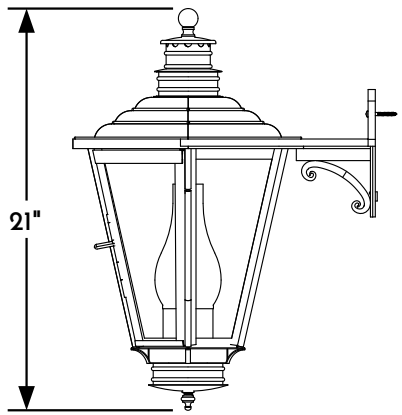

2 WALL LANTERN RIGHT ELEVATION VIEW

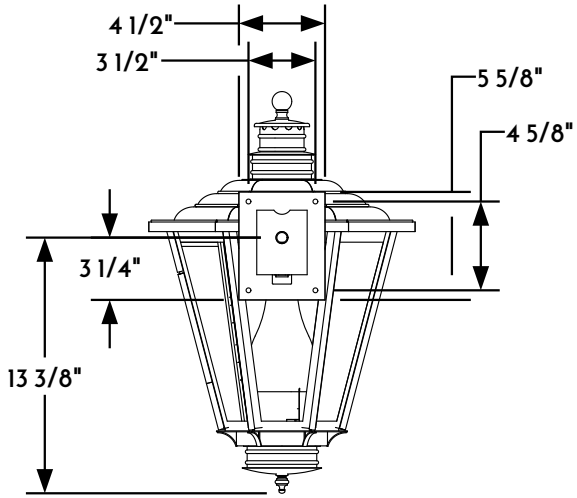

3 WALL LANTERN REAR ELEVATION VIEW

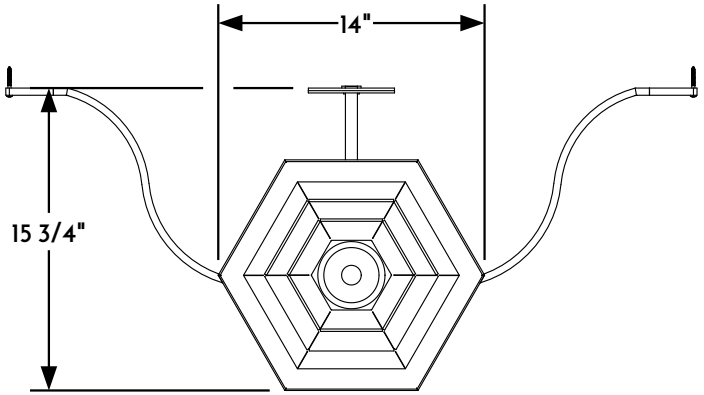

4 WALL LANTERN PLAN VIEW

SCOFIELD LIGHTING

NOTE: Items are hand made
one at a time. There may be slight variations in measurement
and tolerances when comparing to actual Cad drawing.

Heritage Metalworks

Scofield Lighting
English Gas Wall Lantern, Winged
717W Small